Thomas 635CO Air Compressor

The Thomas 635CO, ¾ hp compressor is lightweight, powerful, and portable. It is rated at 2.5 cfm and 100 psi. It weighs only 16 lb. and operates at about 75 to 80 decibels noise level. It is quieter than other compressors due to the design and specialized muffler. Your compressor should require not oil, water, or other maintenance other than keeping it safely out of the way and cleaning it off from time to time.

Your compressor comes completely assembled and set up to power your Turbo Carver. Simply plug it into a reliable 110-volt wall outlet, connect your Turbo Carver and you will be ready to carve or engrave.

This compressor is factory adjusted not to exceed the maximum pressure rating of your Turbo Carver handpiece. You may adjust it to a lower pressure for softer materials by turning out on the screw valve. There is not a pneumatic foot control on this system as an electrical switch is used instead to conveniently turn the compressor on or off to use the handpiece.

Please Note:

- Compression of air creates energy and the compressor may get quite hot during operation. This is normal. It is also normal to have a slight smell of hot parts when the compressor is new. It is suggested taking a break every two to three hours of working.

- The Thomas 635CO needs air for cooling. Do not run it in a confined space such as a box or a closet without fans and adequate vents. This will cause overheating and it will automatically shut down if it gets too hot.

- Use only the normal U.S. electric 110-volt outlet. Outlets with different voltage such as 220 or 240 volts will cause damage to the compressor.

- It is normal for water to squirt from the handpiece from time to time. This is caused by condensation coming from the compressor head. The water will not harm the handpiece or compressor.

Note: The unit is factory adjusted not to exceed the maximum pressure rating of your Turbo Carver handpiece.

Pressure may be lowered for softer materials by turning out on the screw valve.

Turbo Carver - High Speed Carving and Engraving Products, LLC
1-800-373-0707 - www.turbocarver.com
Thomas Compressors – 1-800-558-7721

ULTRA AIR-PAC

THOMAS®

1419 ILLINOIS AVE., SHEBOYGAN, WI 53081 USA (920) 457-4891

OWNER'S MANUAL and OPERATING INSTRUCTIONS for

Model 635CO

Portable, Oilless Heavy Duty Air Compressor

WOB•L PISTON COMPRESSOR

GENERAL DESCRIPTION

Performance in tandem with portability makes the Air-Pac 635CO Ultra our finest, most convenient compressor which is perfect for the professional and serious do-it-yourselfer.

SPECIFICATIONS

Voltage	**115V, 60Hz**
Fuse Requirements	**10 A**
Air Displacement	**3.5 CFM (99.1 LPM)@ 0 PSI**
Air Delivery	**2.1 CFM @ 50 PSI**
	(59.5 LPM @ 345 KPa)
	1.73 CFM @ 80 PSI
	(49 LPM @ 552 KPa)
	1.52 CFM @ 100 PSI
	(43 LPM @ 689.5 KPa)
Amps at Working Pressure	**6.9 A**
Shipping Weight	**15 lbs**
Cord	**6 ft. (1.83 M)**

PSI = Pounds Per Square Inch
KPa = Kilopascals
CFM = Cubic Feet Per Minute
LPM = Liters Per Minute

APPLICATION

Ideal as primary or secondary air source for almost any operation. Particularly suitable for shops, garages; and factories where repetitive use demands high reliability.

Part No. 642637 05/04

©2004 Thomas Industries Sheboyganlnc., Printed in U.S.A
All Rights Reserved

Location of Air Compressor

Operate air compressor in a clean, dry and well ventilated area. The air filter must be kept clear of obstructions which could reduce air flow to the compressor. The air compressor should be located at least 12" away from walls or other obstructions that could interfere with the flow of air.

Extension Cords

To avoid voltage drop and power loss to motor, use additional hose instead of an extension cord. If an extension cord must be used, use only a 3-wire extension cord equipped with a 3-blade grounding plug and a 3-slot receptacle that will accept the plug on the compressor. Be sure to use an extension cord heavy enough to carry the current your product will draw. An undersized cord will cause a drop in line voltage resulting in loss of power and overheating. Make sure the extension cord is in good condition.

MINIMUM GAUGE FOR EXTENSION CORDS				
CORD LENGTH	25 FEET	50 FEET	100 FEET	150 FEET
GAUGE	16	14	10	8

NOTE: Wire size increases as gauge number decreases.

⚠ Grounding Instructions

DANGER: Improper grounding can result in electrical shock. In the event of a short circuit, grounding reduces the risk of shock by providing an escape wire for the electric current. The air compressor must be grounded. This compressor is for use on a nominal 120 volt circuit and is equipped with a grounding wire and appropriate grounding plug that looks like the plug illustrated. The plug must be used with an outlet that has been installed and grounded in accordance with all local codes and ordinances. Make sure that the compressor is connected to an outlet having the same configuration as the plug. No adapter should be used with this product. Inspect the plug and cord before each use. Do not use compressor if there are signs of damage.

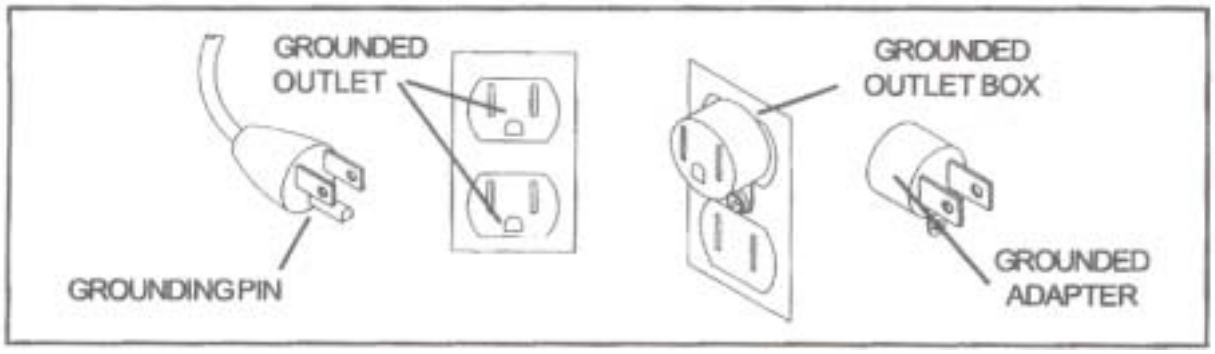

GENERAL MAINTENANCE AND SERVICE

⚠ WARNING: Read and understand the information in this owner's manual before operating air compressor.

1. The compressor should be located in a dry, clean, and well ventilated area.

2. Inspect before use: hose, plug, and cord for signs of damage. Do not use if a deficiency is found. Contact your nearest service center for replacement parts. Never operate a damaged unit.

3. This air compressor needs no lubrication. Applying oil to any part could result in polluted air delivery to the air-handling equip ment.

4. Compressed air must never be aimed at anyone because it can cause serious injury. Keep children away. WEAR EYE PROTEC TION.

5. All air compressors generate heat even under normal operating conditions. To avoid serious burns, never touch the air compressor during or immediately after operation.

6. When unit is not in use, wrap cord around compressor and store in a dry place. Do not abuse cord.

7. Before servicing, cleaning, or removal of any part, shut off power.

8. This system produces 125 PSI. To avoid rupture and injury, do not operate this pump with components rated less than 125 PSI working pressure (including but not limited to spray guns, hose and hose connections without pressure regulator).

If warranty service or repair is needed contact your nearest authorized service center. If one does not exist in your area, contact the factory. Unauthorized repairs or teardown of the unit will void factory warranty.

MAINTENANCE

Air Filter
Inspect air filter (item 21 - compressor drawing) before each use. Clean filter with soap and water as necessary. If filter becomesclogged or damaged, replace it.

WARNING: Never clean air filter with a flammable liquid or solvent. Explosive vapors may accumulate in the air tank and cause an explosion, resulting in serious injury or death.

CAUTION: Do not operate air compressor without air filter.

Thermal Overload Protector

The compressor motor is equipped with a thermal overload protector. If the motor should overheat, the overload protector will shut the motor off. If this occurs, unplug unit and allow motor to cool for approximately 5 minutes.

If compressor fails to start, check for blown fuses; the compressor may require more time to cool. If the overload protector shuts down the motor frequently, it could be due to low voltage. Common signs of low voltage are:

1. Motor does not get up to power or speed.
2. Fuses or circuit breaker activate when starting compressor.
3. Lights dim or remain dim when compressor is started.
4. Other motor operated appliances fail to operate property.
5. Too many motor operated appliances on same circuit.

SET-UP

DANGER: Improper installation of the grounding plug can result in electrical shock. If repair or replacement of the cord or plug is required, do not connect the grounding wire to either flat blade terminal. The wire with the green (with or without yellow stripes) insulation is the grounding wire and must be connected to the grounding pin. Check with a qualified electrician if the grounding instructions are not completely understood, or if unsure unit is properly grounded. Do not modify the plug that has been provided. If it does not fit the available outlet, the correct grounded outlet must be installed by a qualified electrician.

WARNING: Before using air tools or accessories, check manufacturer's maximum pressure rating. Maximum pressure rating must be above 125 PSIG.

EXPLODED VIEW

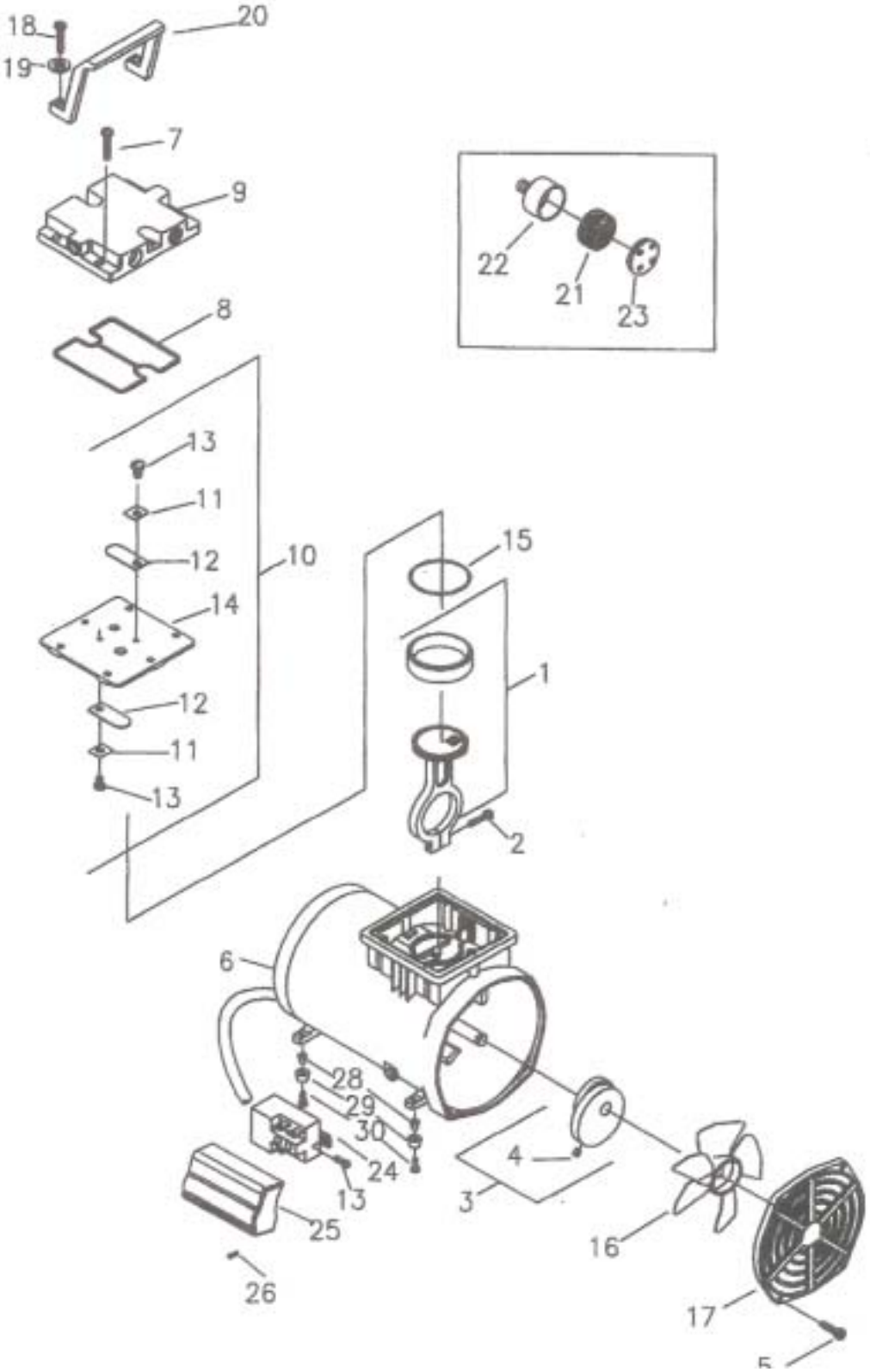

PARTS LIST

Contact the dealer from whom you purchased the compressor for service. To place parts orders, provide the model data located on the nameplate of the compressor and call our National Parts center at **1-800-323-0620.**

Item No.	Part No.	Component Part	Description	Qty
1	666831		Connecting Rod Assembly	1
2	625114		Screw - Connecting Rod	1
3	667135		Ecc. & Bearing Ass'y.	1
4		625244	Set Screw - Eccentric	1
5	625660		Screw - Front Cover	4
6	620159-540		Motor End Cap Assembly	1
7	625646		Screw - Head	6
8	633629		O-Ring Gasket - Head	1
9	661146-500		Head	1
10	621576-540		Valve Plate Assembly	1
11		617045	Valve Keeper	1
12		621580	Valve Flapper - Intake & Exhaust	2
13		625446	Screw - Valve Flapper	4
14		662163-540	Valve Plate	1
15	623539		O Ring - Sleeve	1
16	633572		Fan	1
17	614464		Front Cover	1
18	625564		Screw - Handle	2
19	626014		Washer - Handle & Capacitor Cover	4
20	629113		Handle	1
	660573		Filter Assembly	1
21		641034	Filter - Foam	1
22		660710	Filter Body	1
23		660767	Filter Body Cover	1
24	602844		Relay	1
25	614615		Capacitor Cover	1
26	625449		Screw - Capacitor Cover	2
27	617250		Valve Restraint	1
28	609016		Eyelet	4
29	624422		Bumpers	4
30	625187		Screws	4

THOMAS®
PUMPS & COMPRESSORS